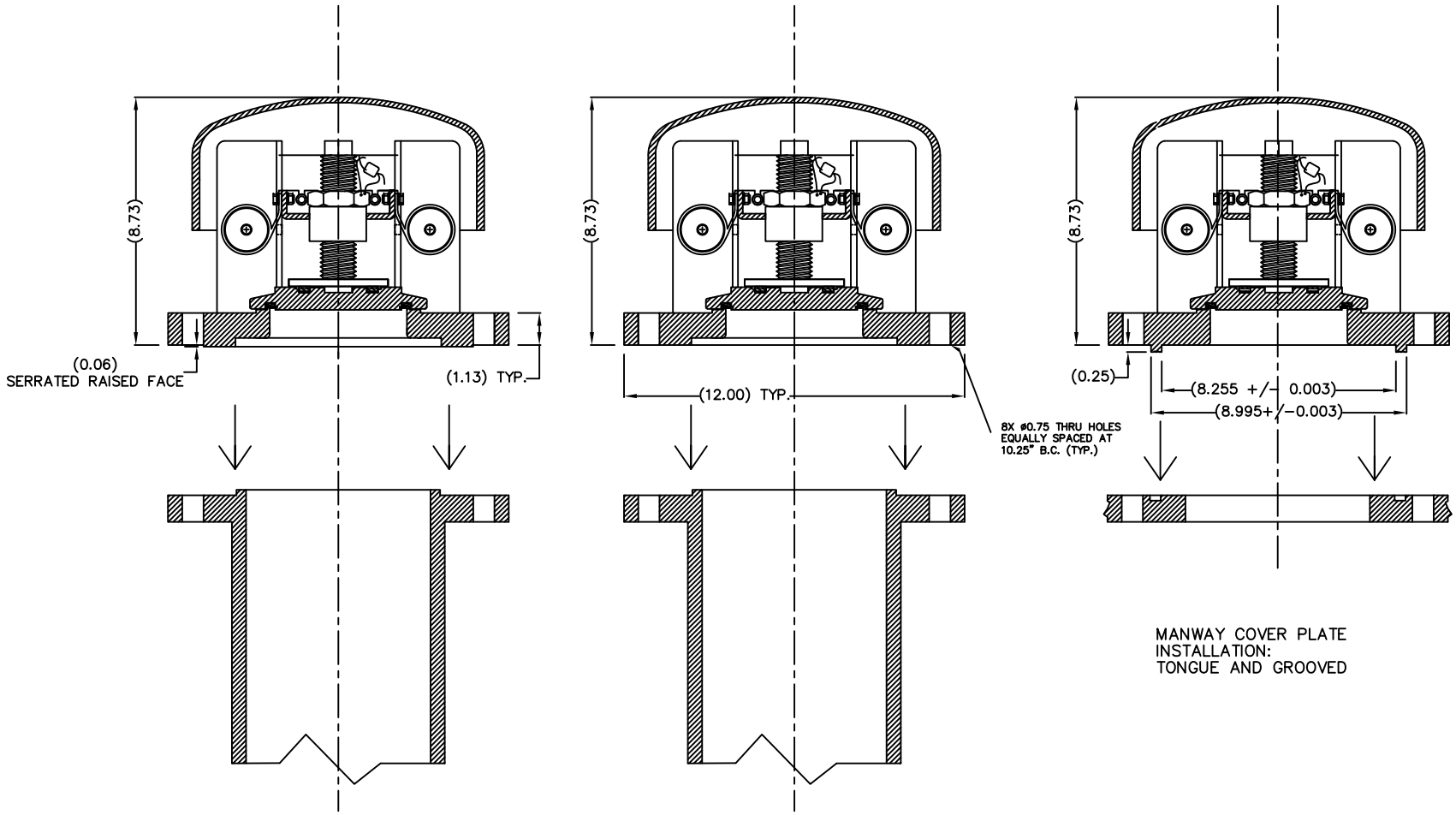

NOZZLE
INSTALLATION:
RAISED
FACED

NOZZLE
INSTALLATION:
FLAT FACED

MANWAY COVER PLATE
INSTALLATION:
TONGUE AND GROOVED

NOTE: MOUNTING
GASKET NOT SHOWN FOR
CLARITY

TOLERANCE
.XX= +/- 0.030 .XXX= +/- 0.005
FRACTIONAL = +/- 0.03
ANGULAR= +/- 1°
FINISHED SURFACES 125

THIS DOCUMENT CONTAINS PROPRIETARY INFORMATION OWNED BY KELSO TECHNOLOGIES OR DEVELOPED AT ITS OWN PRIVATE EXPENSE AND MAY NOT BE USED, DUPLICATED OR DISCLOSED IN WHOLE OR IN PART FOR ANY PURPOSE INCLUDING DESIGN, MANUFACTURE OR PROCUREMENT WITHOUT THE WRITTEN PERMISSION OF KELSO TECHNOLOGIES.

REVISION:	DATE:	DESCRIPTION:

KELSO TECHNOLOGIES INC.
VANCOUVER, BRITISH COLUMBIA

TITLE KELSO PRV COMPARISON – REFERENCE	
DWG. #: KELSO_PRV_COMP_REF	DATE: 2/16/16
REVISED:	DATE:
REVIEWED:	DATE:
DRAWN BY: MN	SHEET: 1 OF 1